TOA150 EXTENDER-TOA SYSTEM CHART(TX)

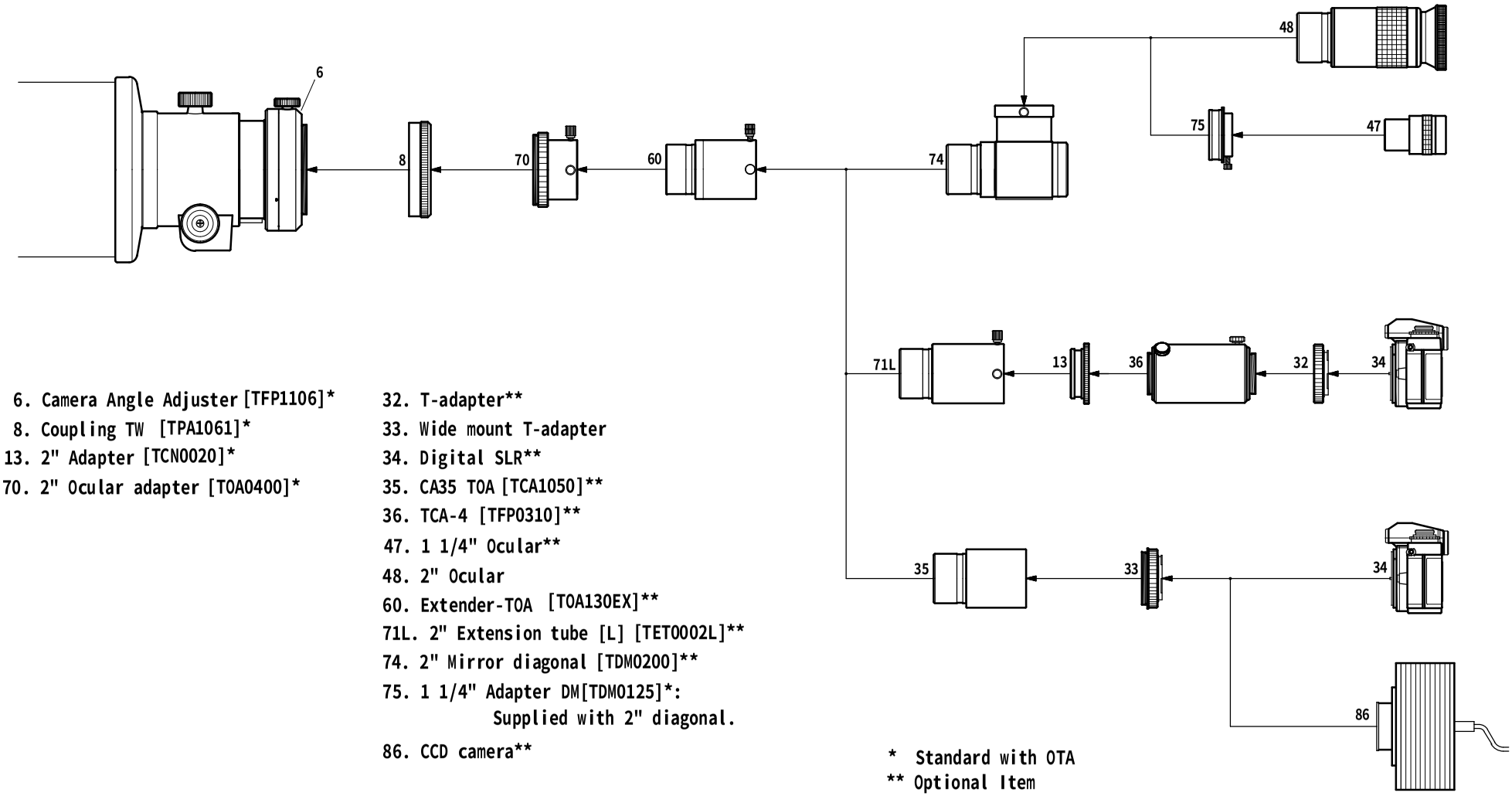

6. Camera Angle Adjuster [TFP1106]*
8. Coupling TW [TPA1061]*
13. 2" Adapter [TCN0020]*
70. 2" Ocular adapter [TOA0400]*

32. T-adapter**
33. Wide mount T-adapter
34. Digital SLR**
35. CA35 TOA [TCA1050]**
36. TCA-4 [TFP0310]**
47. 1 1/4" Ocular**
48. 2" Ocular
60. Extender-TOA [TOA130EX]**
71L. 2" Extension tube [L] [TET0002L]**
74. 2" Mirror diagonal [TDM0200]**
75. 1 1/4" Adapter DM[TDM0125]*:
Supplied with 2" diagonal.
86. CCD camera**

* Standard with OTA
** Optional Item